Treatment of Produced Water by Electrocoagulation

Abstract

Produced water (PW) is salty water trapped in the reservoir rock and brought up along with oil or gas during production. It subsists under high pressures and temperatures, and usually contains hydrocarbons and metals. Therefore, it must be treated before being discharged to surface water. Different techniques are being used to treat PW through phase separations, system control and design, and chemical treatments. In this paper, we discuss our experimental results on treating PW through electrocoagulation (EC). The performance of EC was investigated for the reduction of chemical oxygen demand (COD) and metal ions. Effects of different electrodes, residence time, current density, and pH were also studied to optimize the treatment conditions. Different kinds of cleansing agents, such as lime and borax were used to break the buffering effect encountered during treatment. FTIR, SEM/EDS, and XRD were used to characterize the EC-floc and thus to elucidate removal mechanisms.

Introduction

During the process of lifting oil or gas from underground formations, trapped water is brought to the surface along with oil or gas. This water is known as produced water. In upstream oil and gas operations, saline water is co-produced with crude oil. On a global spectrum, it is estimated that three barrels of water are produced for every barrel of crude oil. As the asset matures, the ratio of water to crude oil produced begins to increase. In North America, the ratio is approaching 10:1. Treatment and disposal of produced water is becoming a leading economic factor in the viability assessment of the asset. This is especially so with offshore platforms where produced water must meet or exceed environmental regulations. Lee et al. (1) reported that for every 1 billion barrel of oil, 7 bbl of water is produced.

The physical and chemical properties of produced water significantly depend on the geographic location of the oil or gas field, the geological contact materials of the water in the past, and the type of the products. In addition of oil and grease, salt content is a primary constituent in produced water that is of much concern in onshore operations. Produced water contains many organic and inorganic compounds. The type and amount of these substances extensively vary from location to location and even over time in the same well. In addition to its natural components, produced waters from oil production may also contain groundwater or seawater (generally called “source” water) injected to maintain reservoir pressure, as well as miscellaneous solids and bacteria. Most produced waters are more saline than seawater (2). In the USA, the salinity of PW ranges from 100 mg/l to 400,000 mg/l, whereas seawater has the salinity of 35,000 mg/l. PW may contain some subset or mixture of dissolved inorganic salts, dispersed hydrocarbons, dissolved hydrocarbons, treatment, well operations, and work-over chemicals, dissolved gases (such as H2S and CO2), bacteria and other organisms, and dispersed solid particles. Quantities of these species vary over an wide range. PW may also include chemical additives used in drilling and producing operations and in the oil/water separation process. The chemical additives are of different kinds for several purposes. They are used to act as corrosion inhibitors of the equipment, as oxygen scavengers, as scale inhibitors, as emulsion breakers and clarifiers in oil-water emulsions, to act as coagulant, flocculants to remove solids, and as solvents to reduce paraffin deposits. In produced water, these chemicals can affect the oil/water partition coefficient, toxicity, bioavailability, and biodegradability (3).

Most offshore PW is discharged under the authority of general permits issued by EPA regional office in the U.S.A. They include limits on oil and grease, toxicity, and other constituents. Under a few circumstances, onshore produced water can be discharged. Generally these discharges are from very small stripper oil wells, coal bed methane wells, or from other wells in which the PW is clean enough to be used for agricultural or wildlife purposes.

Management of PW

PW management generally splits into discharge and injection operations. Most of the onshore PW is injected, while most of the offshore PW is discharged and only some is injected. 65% of the produced water generated in the US is injected back into the producing formation, 30% into deep saline formations and 5% is discharged to surface waters (4). The clean water act requires that all discharges of pollutants to surface waters (streams, rivers, lakes, bays, and oceans) must be authorized by a permit issued under the National Pollutant Discharge Elimination System (NPDES) program. The safe drinking water act of 1974 gave the EPA the authority for Underground injection Control regulation. The UIC program is designed to protect underground sources of drinking water. The injection can be performed in the following two ways: 1) returned by fluid injection into the reservoir where it originated for secondary or enhanced oil recovery; or 2) injected into underground porous rock formations not productive of oil or gas and sealed above and below by unbroken, impermeable strata. Saltwater disposal wells use this second method to manage saltwater. In Texas, EPA awarded the Raiload Commission (RRC) “primary enforcement responsibility” over oil and gas injection and disposal wells on April 23, 1982.

Problems/Challenges

Like any other aqueous system, PW also exists in chemical equilibriums that can shift with the change of temperature, pressure, or pH. This change might cause chemical reactions to occur. These reactions might result in scaling in the mechanical system. The chemical species present in PW are normally in the reduced form. Therefore they may react with oxygen when PW is allowed to contact air. This can bring deposition of iron compounds and elemental sulfur {produced water society). Solid particles and suspended oil droplets may plug lines, valves, and orifices of the disposal wells. Corrosion and bacterial growth can also result in plugging due to electrochemical reactions in PW. The presence of high amount bicarbonate ions constitute buffering effect that does not let the pH of PW change significantly unless strong alkali or acid is added.

Treatment Technology

There are a few primary treatment technologies employed for the treatment of PW. These include phase separations, use of gravity oil/water separators, dissolved air floatation, distillation, and chemical treatment. Among electrochemical methods, electrofloatation and electrodialysis (ED) are being used around the world. ED can remove more than 95% of oil and grease and 89% of total dissolved solids (5). On the other hand, electrofloatation can remove 72% water insoluble oil without addition of any flocculent.

Electrocoagulation

Electrocoagulaton (EC) is an emerging technique for water remediation and is being used profoundly for last a few decades for water remediation. The literature surveys show that EC has the capability of removing most of the water contaminants present in oily waste water and produced water (6-8). In this paper, we are presenting our research of treating produced water by electrocoagulation. We also include here the challenges that we faced during the investigation.

Electrocoagulation is an electrochemical method where coagulants are produced in-situ by passing D.C. current through aqueous media. Sacrificial anodes are dissolved in order to produce the coagulants. In addition, hydrogen gas is evolved from cathode and oxygen or chlorine gas may evolve from anode. The electrodes are generally made of aluminum or iron. In a nutshell, EC is a hybridization of coagulation, floatation and electrochemistry (9).

Experimental

EC was run both in flow-through EC apparatusr (FTEA, manufacturer: Kaselco) and beaker-size reactor. Both iron and aluminum electrodes were used for comparison of the treatments with them. Electrodes were of same size: Kaselco reactor: 10.0 cm × 10.0 cm × 0.5 cm, and beaker size reactor: 6.0 cm x 6.0 cm x 0.2 cm. Produced water was collected from an oil field situated in Shiner, Texas. All measurements were carried out at ambient temperature (25 ± 1 °C). 300 ml aliquot of raw produced water was experimented. Electrocoagulation was conducted at: (i) different residence time, (ii) different pH, (iii) electrode materials, and (iv) chemicals such as lime and borax mainly used as alkalinity boosters. The solution was constantly stirred using a magnetic stirrer to reduce the mass transport overpotential of the EC cell.

The FTEA essentially consists of a flow-through cell, the electrode assembly, the feed pump and the DC power supply unit. A schematic diagram of the FTEA is shown in Figure 1(a). The flow rate of the FTEA was 525 mL/min. The volume of the reactor was 450 mL. Usually, PW was run through the reactor four times. The beaker size EC was carried out in a 400 ml beaker with magnetic stirrer, using vertically positioned aluminum and/or iron electrodes spaced by 3 cm. The experimental set-up is presented in Figure 1(b). The current and voltage during the EC process were measured using Cen-Tech multimeters. The current density was varied 5-26 mA/cm2. For beaker size reactor, each EC treatment was performed for 45 min. The pH of the solutions before and after EC was measured by an Oakton pH meter. The conductivity of PW before and after treatment was measured using an Cole Parmer conductivity meter.

The COD of the untreated and treated PW was determined using Hach COD reagents and Hach digestor (DRB 200) and the COD values were colorimetric determined using a DR 3000 Hach spectrophotometer. Metal ions in PW (before and after treatment) were analyzed using Atomic Absorption Spectrometry (Perkin Elmer, AAnalyst 300 SE 3953). The EC-floc was characterized using Bruker XRD (D8 Discover), Nicolet Nexus 470 FTIR, and SEM-EDS (Hitachi S-3400N, EDAX).

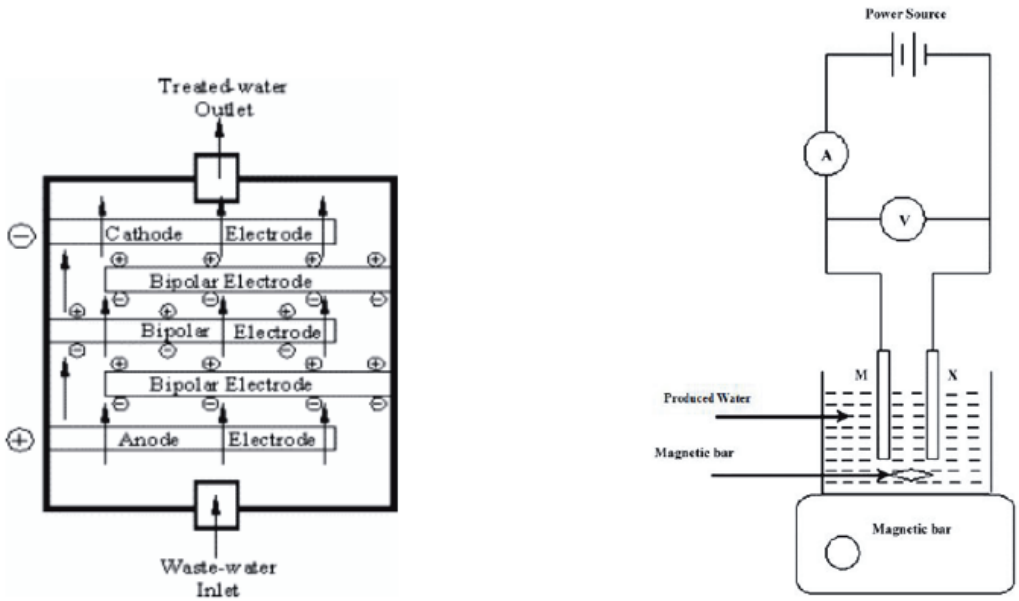

Figure 1: The schematic of EC reactors: (a) FTEA and (b) beaker-size reactor

Results and Discussion

COD

Table I shows results of COD measurements of PW at different experimental conditions. As alkalinity boosters, lime (Ca(OH)2), caustic soda (NaOH), and sodium metaborate (NaBO2) were used. For the FTEA, PW was passed through the reactor two times using either iron or aluminum electrodes. According to Table I, it can be observed that overall, the COD removal efficiency was found to be 68 ± 12 mg/L using FTEA. On the other hand, for beaker-size reactor, it was 67 ± 3 mg/L. The highest removal efficiency was found (74.1%) when sodium metaborate was used as alkalinity booster using aluminum as sacrificial electrodes. The results of beaker-size reactor also show that the use of aluminum electrode increase the COD removal. Although the use of alkalinity booster helps break the buffering effect, but apparently they do not help reduce COD as compared to the EC treatment without them.

Metal ions

The analysis of raw PW using AAS showed the presence the following metal ions: cadmium, chromium, copper, lead, nickel, silver, zinc, calcium, magnesium, iron, and manganese. The analysis of EC-treated PW showed insignificant change of concentration of those metal ions. EC can very efficiently remove the above metal ions through physio-chemical adsorption with iron oxides/hydroxides/oxyhydroxides. Since during EC run with PW, pH does not go beyond 9, the optimum condition for production of green rust does not achieve. Therefore, the significant removal of metal ions was not realized. Alkalinity boosters also do not adequately help to raise the pH. Research is under progress in this regard.

Table I: EC treatment of produced water and COD removal efficiencies FTEA: Flow-Through EC Apparatus.

Reactor type	Alkalinity booster	Current density (mA/cm^2)	pH		Conductivity (mS/cm)		COD (mg/L)		COD Removal (%)
			Pre-EC	Post-EC	Pre-EC	Post-EC	Pre-EC	Post-EC	
FTEA, Fe, 2 EC	Not added	10.0	6.0	6.2	153	141	27,000	7,200	73.3
FTEA, Fe, 2 EC	Not added	20.0	6.0	6.7	165	155	27,000	4,620	82.9
FTEA, Fe, 2 EC	$Ca(OH)_2$	20.0	8.6	8.9	133	133	35,000	13,850	60.4
FTEA, Fe, 2 EC	NaOH	10.0	8.4	8.0	298	302	35,000	12,400	64.6
FTEA, Fe, 2 EC	$NaBO_2$	20.0	8.6	8.5	83	101	35,000	9,460	73.0
FTEA, Al,	$Ca(OH)_2$	20.0	9.1	-	128	-	30,800	16,600	46.1
FTEA, Al, 2 EC	$NaBO_2$	20.0	8.6	-	80	-	35,000	9.080	74.1
Beaker, Fe, 45 min	Not added	13.9	6.7	6.4	167	-	32,000	11,320	64.5
Beaker, Al, 45 min	Not added	13.9	6.7	6.1	161	188	32,000	9,780	69.4

PH

Figure 2 shows the change of pH during EC operations using FTEA as shown in Figure 2, pH of the treated PW decreases as number of EC passes increases. Without alkalinity boosters, the pH of the solution goes slightly up, stays almost constant for a while, and then decreases. The inherent buffer works very efficiently that hinders the raise of pH during EC. pH in the range of 9-12 is vital for significant production of green rust when sacrificial iron electrodes are used. This green rust is of tremendous importance for removal of most metal contaminants (10). The results of beaker-size reactors confirm the consequence of inherent buffering effect.

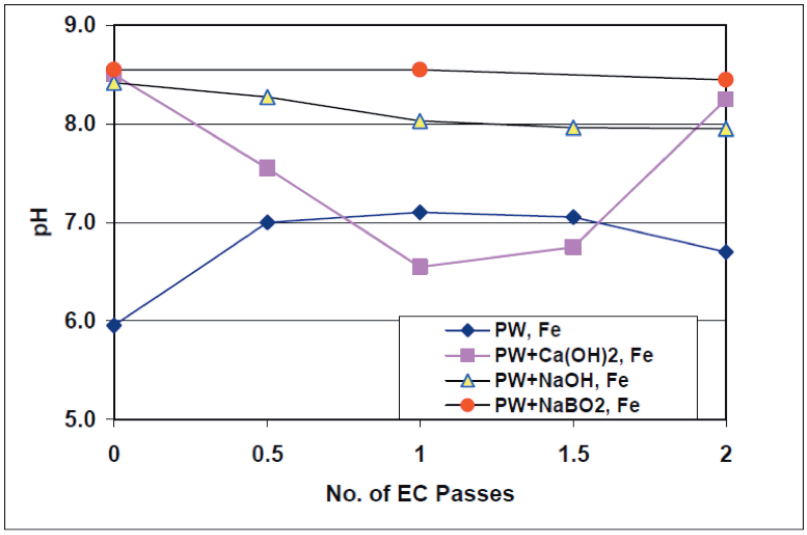

Figure 2. Change of pH with number EC passes using FTEA

EC-Floc Analysis

XRD Analysis. After running EC, the floc was collected through filtration. X-ray diffraction patterns were captured using general area detector diffraction system (GADDS). Figure 3 shows examplatory pattern of the floc with iron. It also indicates the presence of excessive amount of halite, and the amorphous nature of the iron oxides/hydroxides/oxyhydroxides and aluminum oxide.

FTIR Analysis. ATR-FTIR was also performed for the EC-floc. It showed the presence of hydroxyl group and characteristic vibrations of hydrocarbons (not presented here).

SEM-EDS. SEM and EDS were also performed on the EC-floc. In general, they indicates the exclusive presence of crystalline sodium chloride. Figure 4 shows the magnified version of the SEM taken for EC-floc with iron. It indicates the presence of amorphous iron species as found in the XRD pattern. Table II presents the elemental analysis of EC-floc with both iron and aluminum. It also confirms the profound presence of halite in both the flocs. In addition, it also indicates the presence of O, Fe, and Ca in case of iron sacrificial electrode, and O, Al, Ca, and Mg in case of aluminum sacrificial electrode.

Table II. Elemental Analysis of EC-floc with iron and aluminum sacrificial electrodes using EDS.

Electrode	O	Na	Mg	Al	Cl	Ca	Fe
Al	19.61	36.25	0.55	5.69	37.07	0.83	-
Fe	18.13	39.41	-	-	32.95	1.31	8.20

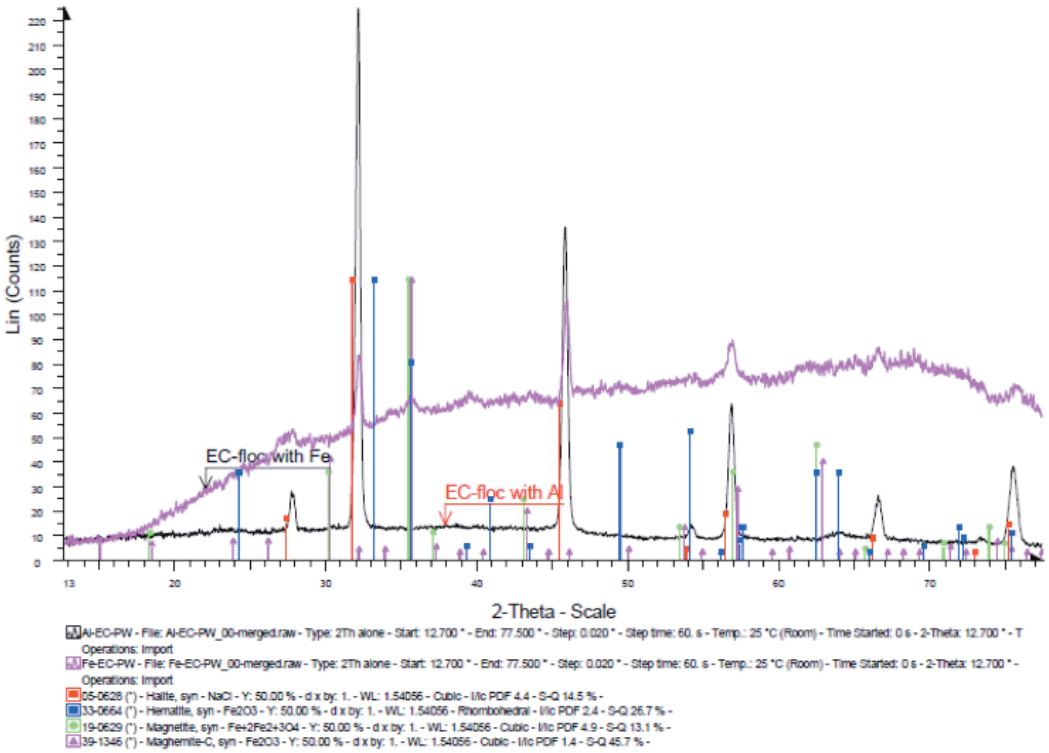

Figure 3. X-ray diffraction pattern of the EC-floc obtained after running EC on PW and filtering. The pink pattern points to EC-floc with Fe and the black pattern with Al. The reference patterns- red: halite, blue: hematite, green: magnetite, pink: maghemite.

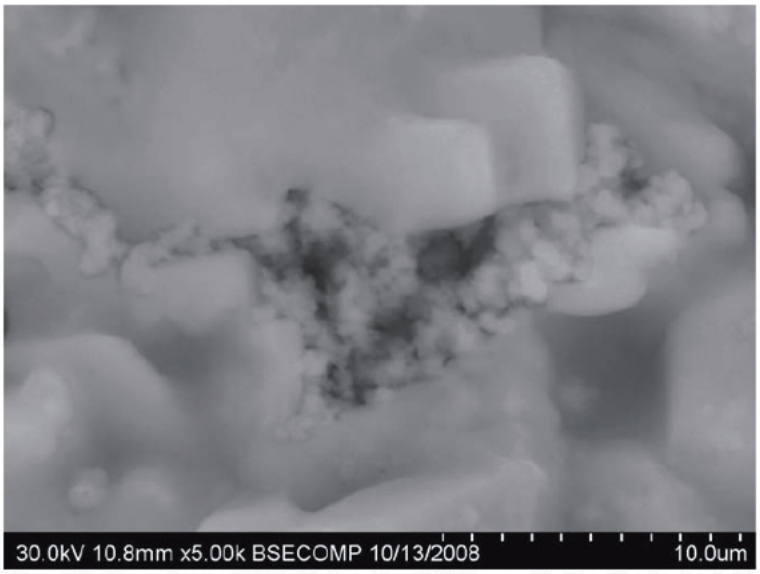

Figure 4. Magnified version of SEM taken for EC-floc with Fe electrode indicating the amorphous/nanocrystalline nature of iron species (near the center to right side of this image)

Conclusion

Electrocoagulation can be used to treat produced water, although it needs more exploration for improving the conditions and removal efficiencies of COD, metal ions, and other organic and inorganic species. Alkalinity boosters, such as lime, and sodium metaborate, in general help increase pH, but not enough to break the inherent buffering effect. EC-floc characterization indicates the presence of exclusive amount of sodium chloride. In addition, SEM indicates the amorphous/nanocryatalline nature of iron species of in EC-floc using iron sacrificial electrode.

Acknowledgments

We express our gratefulness to Welch foundation (V-1103), ATP (003581-0033-2003), and USDA (2004-38899-02181) for their generous support for this research. In addition, we are thankful to Dr. Paul Bernanzani and Mr. Dan Rutmanof Lamar University for allowing us to use ATR-FTIR and SEM-EDS instruments, respectively. We are indebted to Kaselco for their support to use their facilities and instruments. We also thank Mr. Jaime Bazan for the metal ion analysis using AAS of Kaselco.

Jewel Gomes[1], David Cocke[2], Kamol Das[3], Mallikarjuna Guttula[3], Doanh Tran[1], Jim Beckman[4]
[1]Department of Chemical Engineering, Lamar University, Beaumont, TX 77710
[2]Gill Chair of Chemical Engineering, Lamar University, Beaumont, TX 77710
[3]Department of Civil Engineering, Lamar University, Beaumont, TX 77710
[4]Kaselco, Shiner, TX 77984

References

1. R. Lee, R. Seright, M. Hightower, A. Sattler, M. Cather, B. McPherson, L. Wrotenbery, D. Martin, and M. Whiteworth, Strateries for Produced Water Handling in New Mexico" (Paper presented at the 2222 Ground Water Protection Council Produced Water Conference, Colorado Springs, CO, 16-17 October, 2000).

2. J.T. Cline, "Treatment and Discharge of Produced Water for Deep Offshore Disposal" (Paper presented at the API Produced Water management Tedchnical Forum and Exhibition, Lafayette, LA, 17-18 November, 1998).

3. J. Brendehaug, S. Johnsen, K.H. Bryne, A.L. Gyose, and T.H. Eide, "Toxicity Testing and Chemical Characterization of Produced Water – A Preliminary Study," Produced Water, ed. J.P. Ray and F.R. Englehart, (Plenum Press, New York, 1992).

4. Produced Water Society, http://70.86.131.22/~produced/index.php, accessed in October (2008).

5. T. Hayes and D. Arthur, "Overview of Emerging Produced Water Treatment Technologies" (Paper presented at the 11th Annual International Petroleum Environmental Conference, Albuquerque, NM, 12-15 October, 2004).

6. M. Elektorowicz, S. Habibi, R. Chifrina, "Effect of Electrical Potential on the Electrodemulsification of oily sludge," journal of Colloid and Interface Science, 295 (2006), 535-541.

7. ,I. McBeth, K.J. Reddy, Q.D. Skinner, "Chemistry of Trace Elements in Coalbed Methane Product Water", Water Research, 37 (2003), 884-890.

8. M. Tir, N. Moulai-Mostefa, "Optimization of oil removal from oily wastewater by electrocoagulation using response surface method", Journal of Hazardous Materials, 158 (2008), 107-115.

9. P.K. Holt, G.W. Barton, and C.A. Mitchell, "The future for electrocoagulation as a localized water treatment technology," Chemosphere, 59 (2005), 355-367.

10. H.A. Moreno C., D.L. Cocke, J.A.G. Gomes, P. Morkovsky, and J. R. Parga, "Electrocoagulation Mechanism For Metal Removal," Electrochemical Society Transactions, 2(13) (2007), 51.